YON TANNER ARCHITECTURE PC
2175 SOUTH JASMINE # 217 DENVER, CO 80222
PH: (303) 691-8000
FX: (303) 756-2332

Date: **December 10, 2018**
Project: **Red Rocks Community College Community Room Relocation**

ADDENDUM # 2

The Drawings, Specifications, and Contract documents on the project are modified, corrected, supplemented, and/or superseded as hereinafter described. It will be construed that each bidder's proposal is submitted with full knowledge of all modifications and supplemental data specified herewith. This addendum may effect pricing. Failure to acknowledge this addendum may be cause for rejection of bid.

QUESTIONS:

Item 1: *Question: What is the load limit and point load limit for the metal deck slab at the community room?*

Answer: Existing main level floor system was designed to support a 100 psf live load. This is per the original drawings. Prior to any loading the contractor should verify/confirm shoring per specification section 024119. Contractor is responsible for all engineering required for project shoring.

Item 2: *Question: How many slab penetrations may be performed at one time, in regards to the helical pier install, to avoid undermining the structural integrity of the slab-on-deck?*

Answer: In order to provide adequate support of patch-back deck, existing slab and deck must be removed from centerline of existing joist to center line of existing joist. Parallel to existing joist span, demo may be as much or as little as needed for access.

Item 3: *Question: Based on the boring logs, bedrock is encountered within a few feet from grade. We do not feel helical piers will be a successful foundation support system. Would you consider micropiles as an alternate?*

Answer: Micropiles with pier caps are acceptable.

Item 4: *Question: Can you provide information on how many lbs/sf the metal decking/concrete structural floor can hold? We would like to know if a small skid mounted rock drill could be used.*

Answer: Existing main level floor system was designed to support a 100 psf live load. This is per the original drawings. Prior to any loading the contractor should verify/confirm shoring per specification section 024119. Contractor is responsible for all engineering required for project shoring.

SPECIFICATIONS:

No items are included in this Addendum.

DRAWINGS:

Item 5: **Drawing S0.1:** Add submittal note under required verification and inspection information.
Item 6: **Drawing S1.2:** Revise joist callout.
Item 7: **Drawing S2.1:** Revise detail 8/S2.1

ATTACHMENTS:

S0.1 revised 12-10-18
S1.2 revised 12-10-18
S2.1 revised 12-4-2018
END OF ADDENDUM # 2

GENERAL NOTES:

1. LIVE LOADS USED IN DESIGN (2015 IBC):
   A. WIND (Vult).....130 MPH, EXP "C"
   B. EARTHQUAKE.....DESIGN CATEGORY B
      1) SITE CLASS.....C
      2) Ss.....0.20
      3) S1.....0.06
      4) SDS.....0.185
      5) SD1.....0.066
      6) RISK CATEGORY.....III
      7) IE.....1.25
      8) EQUIVALENT LATERAL FORCE PROCEDURE
      9) ORDINARY STEEL MOMENT FRAMES
      10) R.....3.5
      11) CS.....0.07
      12) BASE SHEAR.....20.3K
   C. GROUND SNOW (Pg).....30 PSF
   D. MEZZANIE INFILL FLOOR
      1)UNIFORM LOAD.....80 PSF
      2)POINT LOAD.....2000#
2. CONCRETE
   A. ALL CONCRETE FOR FOOTINGS, FOUNDATION WALLS, CAISSONS, AND GRADE BEAMS SHALL BE MADE WITH TYPE II CEMENT, STONE AGGREGATE AND SHALL DEVELOP 3000 PSI COMPRESSIVE STRENGTH IN 28 DAYS. CONCRETE FOR SLABS-ON-GRADE AND POURED-IN-PLACE TOPPINGS MADE WITH TYPE II CEMENT, STONE AGGREGATE AND SHALL DEVELOP 4000 PSI COMPRESSIVE STRENGTH IN 28 DAYS AND SHALL HAVE A MAXIMUM SLUMP OF 3 ½" AND A MAXIMUM W/C RATIO OF .45.
   B. ALL REINFORCING BARS SHALL BE ASTM A615-GRADE 60, EXCEPT COLUMN TIES, BEAM STIRRUPS, AND EMBEDDED PLATE ANCHORS WHICH SHALL BE ASTM A615-GRADE 40. WELDABLE REINFORCING SHALL BE ASTM A706-GRADE 60. WELDED WIRE FABRIC SHALL CONFORM TO ASTM A1064. HEADED STUDS SHALL CONFORM TO ASTM A108 WITH 60 KSI TENSILE STRENGTH.
   C. CONCRETE PROTECTION FOR REINFORCEMENT (UNLESS OTHERWISE NOTED):
      1) CONCRETE POURED AGAINST EARTH.....3"
      2) CONCRETE POURED IN FORMS BUT EXPOSED TO WEATHER OR EARTH:
         A) #5 BARS AND SMALLER.....1 ½"
         B) BARS LARGER THAN #5.....2"
      3) COLUMNS, GIRDERS, AND BEAMS (PRINCIPAL REINFORCEMENT, TIES, AND STIRRUPS).....1 ½"
      4) SLABS AND WALLS.....3/4"
   D. NO SPLICES OF REINFORCEMENT SHALL BE MADE AND NO WELDING TO REINFORCING SHALL BE PERMITTED, EXCEPT AS DETAILED OR AUTHORIZED BY THE STRUCTURAL ENGINEER. LAP SPLICES, WHERE PERMITTED, SHALL BE A MINIMUM OF 36 BAR DIAMETERS. WIRE FABRIC REINFORCEMENT MUST LAP ONE FULL MESH PLUS 2" AT SIDE AND END LAPS, BUT NOT LESS THAN 6", AND SHALL BE WIRED TOGETHER. MAKE ALL BARS CONTINUOUS AROUND CORNERS OR PROVIDE CORNER BARS OF EQUAL SIZE AND SPACING.
   E. DETAIL BARS IN ACCORDANCE WITH THE LATEST EDITIONS OF ACI DETAILING MANUAL AND ACI BUILDING CODE REQUIREMENTS FOR REINFORCED CONCRETE.
   F. PROVIDE ALL ACCESSORIES NECESSARY TO SUPPORT REINFORCING AT POSITIONS SHOWN ON THE PLANS.
   G. PLACE 2-#5 BARS WITH 2'-0 PROJECTIONS AROUND ALL OPENINGS IN CONCRETE.
   H. SLABS AND BEAMS SHALL NOT HAVE JOINTS IN A HORIZONTAL PLANE. ANY STOP IN CONCRETE WORK MUST BE MADE AT CENTER OF SPAN WITH VERTICAL BULK HEADS AND HORIZONTAL KEYS, UNLESS OTHERWISE SHOWN. ALL CONSTRUCTION JOINTS SHALL BE AS DETAILED OR AS APPROVED BY THE ARCHITECT.
   I. CONTINUOUS BARS IN WALLS, BEAMS AND GRADE BEAMS SHALL BE SPLICED AT MIDSPAN FOR TOP BARS AND OVER THE SUPPORT FOR BOTTOM BARS.
   J. CONCRETE WALL REINFORCING SHALL BE #4 AT 12" EACH WAY, EACH FACE UNLESS OTHERWISE NOTED.
3. STEEL
   A. ALL STRUCTURAL STEEL WIDE FLANGE SECTIONS SHALL CONFORM TO ASTM A992 EXCEPT PIPE COLUMNS WHICH SHALL CONFORM TO ASTM A53, GRADE B, AND TUBE COLUMNS WHICH SHALL CONFORM TO ASTM A500, GRADE C, ALL OTHERS SHALL CONFORM TO A36 LATEST EDITIONS. ALL COLD-FORMED STEEL SHALL CONFORM TO ASTM A570 GRADE 50KSI FOR 16 GAGE AND HEAVIER AND ASTM A570 GRADE 33KSI FOR 18 GAGE AND LIGHTER.
   B. STRUCTURAL STEEL SHALL BE DETAILED, FABRICATED AND ERECTED IN ACCORDANCE WITH LATEST PROVISIONS OF AISC MANUAL OF STEEL CONSTRUCTION AND AISC CODE OF STANDARD PRACTICE.
   C. USE STANDARD FRAMED BEAM CONNECTIONS WITH ¾" BOLTS (OR WELDED EQUIVALENT) UNLESS OTHERWISE NOTED. SELECT CONNECTIONS TO SUPPORT ONE-HALF THE TOTAL UNIFORM LOAD CAPACITY FOR EACH GIVEN BEAM AND SPAN. THE EFFECT OF CONCENTRATED LOADS SHALL ALSO BE CONSIDERED.
   D. ALL WELDERS SHALL HAVE EVIDENCE OF PASSING THE AWS STANDARD QUALIFICATIONS TESTS.
   E. CONNECTIONS MADE WITH HIGH STRENGTH STEEL BOLTS SHALL CONFORM IN ALL RESPECTS TO THE CURRENT SPECIFICATIONS FOR STRUCTURAL JOINTS USING ASTM A325 BOLTS AS ENDORSED BY AISC.
   F. STEEL JOISTS SHALL BE DESIGNED, FABRICATED, AND ERECTED IN ACCORDANCE WITH STEEL JOIST INSTITUTE SPECIFICATIONS. WHERE STEEL JOISTS BEAR ON STRUCTURAL STEEL FRAMING THE JOIST NEAREST EACH COLUMN ON EACH SIDE OF THE BEAM SHALL BE BOLTED TO THE BEAM.
   G. STEEL DECK
      1) ALL STEEL DECK SHALL BE ERECTED IN ACCORDANCE WITH DECK MANUFACTURER'S SUGGESTED SPECIFICATIONS.
      2) STEEL DECK BY OTHER MANUFACTURERS MAY BE SUPPLIED IN LIEU OF THAT SHOWN PROVIDED SECTION PROPERTIES ARE SIMILAR TO THOSE OF DECK SPECIFIED, AND IF APPROVED BY THE ARCHITECT.
      3) DECK SUPPLIER SHALL PROVIDE ALL ADDITIONAL FRAMING AS REQUIRED FOR OPENINGS THROUGH DECK.
      4) ALL ANGLES NECESSARY TO SUPPORT DECK EDGES, BUT NOT SHOWN ON THE DRAWINGS, SHALL BE FURNISHED BY THE CONTRACTOR.
      5) WELD DECK TO SUPPORTS WITH 5/8" PUDDLE WELDS AT 10" O.C. CONNECT DECK AT ADJACENT SEAMS WITH 3 #10 TEK SCREW SIDELAP FASTENERS PER SPAN.
4. WOOD-N/A
5. MASONRY-N/A
6. FOUNDATIONS
   A. SOIL DATA WAS TAKEN FROM RECOMMENDATIONS SET FORTH IN REPORT #18-3615, BY GROUND ENGINEERING, DATED AUGUST 2, 2018.
   B. HELICAL PIERS SHALL BEAR IN BEDROCK ACCORDING TO REPORT RECOMMENATIONS.
   C. PROVIDE 4" MINIMUM CONTINUOUS VOID FORM BENEATH ALL GRADE BEAMS.
   D. A REPRESENTATIVE FROM THE SOIL ENGINEER'S OFFICE SHALL APPROVE BEARING CONDITIONS PRIOR TO PLACEMENT OF FOUNDATIONS.
7. ALL DIMENSIONS ON STRUCTURAL DRAWINGS SHALL BE CHECKED AGAINST ARCHITECTURAL.
8. ARCHITECT'S APPROVAL MUST BE SECURED FOR ALL SUBSTITUTIONS.
9. VERIFY ALL OPENINGS THROUGH FLOOR, ROOF, AND WALLS WITH MECHANICAL AND ELECTRICAL CONTRACTORS.
10. ALL DIMENSIONS SHALL BE FIELD VERIFIED BY THE CONTRACTOR. IT IS THE CONTRACTOR'S RESPONSIBILITY TO IMMEDIATELY NOTIFY THE ENGINEER SHOULD EXISTING CONDITION NOT BE SHOWN, OR IF ANY CONDITION DIFFERS FROM THOSE SHOWN ON THE DRAWINGS.
11. ANY DISCREPANCIES ON THESE DRAWINGS SHALL BE BROUGHT TO THE ENGINEER'S ATTENTION PRIOR TO PROCEEDING WITH WORK.
12. THE REQUIREMENTS OF THE LATEST EDITION OF THE "OSHA CONSTRUCTION STANDARDS" SHALL BE COMPLIED WITH BY ALL CONTRACTORS, FABRICATORS, AND SUPPLIERS.
13. DURING ERECTION OF THE BUILDING, THE CONTRACTOR SHALL BE RESPONSIBLE FOR TEMPORARY BRACING TO WITHSTAND ALL LOADS TO WHICH THE STRUCTURE MAY BE SUBJECTED, INCLUDING LATERAL LOADS, STOCKPILES OF MATERIALS, AND EQUIPMENT. SUCH BRACING SHALL BE LEFT IN PLACE AS LONG AS MAY BE REQUIRED FOR SAFETY AND UNTIL THE STRUCTURAL FRAMING AND DIAPHRAGMS ARE IN PLACE WITH CONNECTIONS COMPLETED.

REQUIRED VERIFICATION AND INSPECTION OF STEEL CONSTRUCTION

VERIFICATION AND INSPECTION	CONTINUOUS	PERIODIC
1. MATERIAL VERIFICATION OF HIGH-STRENGTH BOLTS, NUTS AND WASHERS:		
a. IDENTIFICATION MARKINGS TO CONFORM TO ASTM STANDARDS SPECIFIED IN THE APPROVED CONSTRUCTION DOCUMENTS.	---	X
b. MANUFACTURER'S CERTIFICATE OF COMPLIANCE REQUIRED	---	X
2. MATERIAL VERIFICATION OF HIGH-STRENGTH BOLTS, NUTS AND WASHERS:		
a. SNUG-TIGHT JOINTS.	---	X
b. PRETENSIONED AND SLIP-CRITICAL JOINTS USING TURN-OF-NUT WITH MATCHMARKING OR CALIBRATED WRENCH METHODS OF INSTALLATION.	---	X
c. PRETENSIONED AND SLIP-CRITICAL JOINTS USING TURN-OF-NUT WITHOUT MATCHMARKING OR CALIBRATED WRENCH METHODS OF INSTALLATION.	X	---
3. MATERIAL VERIFICATION OF STRUCTURAL STEEL AND COLD-FORMED STEEL DECK:		
a. FOR STRUCTURAL STEEL, IDENTIFICATION MARKINGS TO CONFORM TO AISC 360.	---	X
b. FOR OTHER STEEL, IDENTIFICATION MARKINGS TO CONFORM TO ASTM STANDARDS SPECIFIED IN THE APPROVED CONSTRUCTION DOCUMENTS.	---	X
c. MANUFACTURER'S CERTIFIED TEST REPORTS.	---	X
4. MATERIAL VERIFICATION OF WELD FILLER MATERIALS.		
a. IDENTIFICATION MARKINGS TO CONFORM TO AWS SPECIFICATION IN THE APPROVED CONSTRUCTION DOCUMENTS.	---	X
b. MANUFACTURER'S CERTIFICATE OF COMPLIANCE REQUIRED.	---	X
5. INSPECTION OF WELDING:		
a. STRUCTURAL STEEL AND COLD-FORMED STEEL DECK:		
1) COMPLETE AND PARTIAL JOINT PENETRATION GROOVE WELDS.	X	---
2) MULTIPASS FILLET WELDS.	X	---
3) SINGLE-PASS FILLET WELDS > 5/16"	X	---
4) PLUG AND SLOT WELDS.	X	---
5) SINGLE-PASS FILLET WELDS ≤ 5/16"	---	X
6) FLOOR AND ROOF DECK WELDS.	---	X
6. INSPECTION OF STEEL FRAME JOINT DETAILS FOR COMPLIANCE:		
a. DETAILS SUCH AS BRACING AND STIFFENING.	---	X
b. MEMBER LOCATIONS.	---	X
c. APPLICATION OF JOINT DETAILS TO EACH CONNECTION.	---	X

REQUIRED VERIFICATION AND INSPECTION OF CONCRETE CONSTRUCTION

VERIFICATION AND INSPECTION	CONTINUOUS	PERIODIC
1. INSPECTION OF REINFORCING STEEL, INCLUDING PRESTRESSING TENDONS, AND PLACEMENT.	---	X
2. INSPECTION OF BOLTS TO BE INSTALLED IN CONCRETE PRIOR TO AND DURING PLACEMENT OF CONCRETE WHERE ALLOWABLE LOADS HAVE BEEN INCREASED OR WHERE STRENGTH DESIGN IS USED.	X	---
3. INSPECTION OF ANCHORS INSTALLED IN HARDENED CONCRETE.	---	X
4. VERIFYING USE OF REQUIRED DESIGN MIX.	---	X
5. AT THE TIME FRESH CONCRETE IS SAMPLED TO FABRICATE SPECIMENS FOR STRENGTH TESTS, PERFORM SLUMP AND AIR CONTENT TESTS, AND DETERMINE THE TEMPERATURE OF THE CONCRETE.	X	---
6. INSPECTION OF CONCRETE AND SHOTCRETE PLACEMENT FOR PROPER APPLICATION TECHNIQUES.	X	---
7. INSPECTION FOR MAINTENANCE OF SPECIFIED CURING TEMPERATURE AND TECHNIQUES.	---	X
8. INSPECT FRAMEWORK FOR SHAPE, LOCATION AND DIMENSIONS OF THE CONCRETE MEMBER BEING FORMED.	---	X

REQUIRED VERIFICATION AND INSPECTION OF CAST-IN-PLACE DEEP FOUNDATION ELEMENTS

VERIFICATION AND INSPECTION TASK	CONTINUOUS	PERIODIC
1. OBSERVE DRILLING OPERATIONS AND MAINTAIN COMPLETE AND ACCURATE RECORDS OF EACH ELEMENT	X	---
2. VERIFY PLACEMENT LOCATIONS AND PLUMBNESS, CONFIRM ELEMENT DIAMETERS, BELL DIAMETERS (IF APPLICABLE), LENGTHS, EMBEDMENT INTO BEDROCK (IF APPLICABLE) AND ADEQUATE END-BEARING STRATA CAPACITY. RECORD CONCRETE OR GROUT VOLUMES.	X	---
3. FOR CONCRETE ELEMENTS, PERFORM ADDITIONAL INSPECTIONS IN ACCORDANCE WITH SECTION 1704.4.	---	X

1704.10 SPECIAL INSTRUCTIONS SHALL BE PERFORMED DURING INSTALLATION OF HELICAL PILE FOUNDATIONS. THE INFORMATION RECORDED SHALL INCLUDE INSTALLATION EQUIPMENT USED, PILE DIMENSIONS, AND FINAL INSTALLATION TORQUE.

DEFERRED SUBMITTALS SHALL BE PROVIDED TO THE EOR AND BUILDING OFFICIAL AS NOTED:
HELICAL PILES AND ASSOCIATED COMPONENTS;
STEEL JOISTS
SUBMITTALS SHALL INCLUDE DESIGN CALCULATIONS AND SHALL BEAR THE SEAL OF THE REGISTERED DESIGN PROFESSIONAL RESPONSIBLE FOR DESIGN.

2

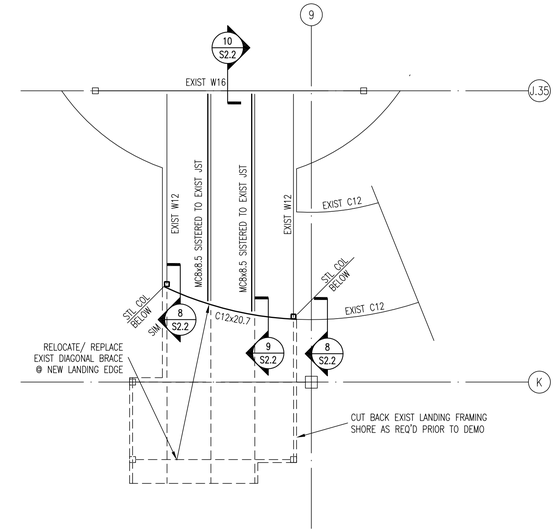

1 S0.1 STAIR LANDING PLAN
1/4"=1'-0"

NOTES:
1. FIELD VERIFY EXISTING CONDITIONS & DIMENSIONS SHOWN PRIOR TO ANY STEEL FABRICATION.

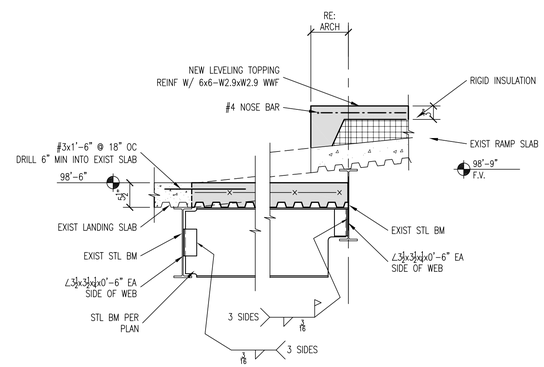

3 S0.1 SECTION
3/4"=1'-0"

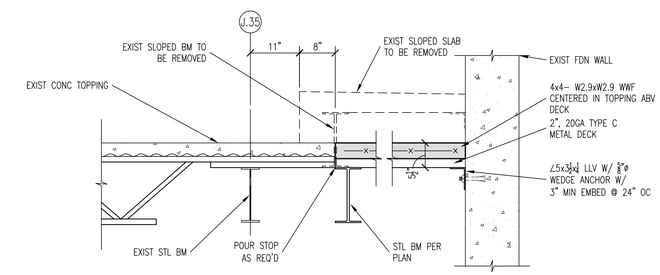

2 S0.1 SECTION
3/4"=1'-0"

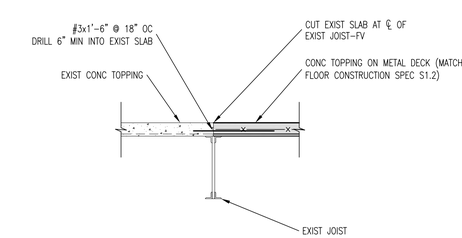

4 S0.1 SECTION
TYPICAL SLAB PATCH DETAIL
3/4"=1'-0"

Studio 818 ENGINEERING
7611 GRANDVIEW AVE.
DENVER, CO 80002
303 255 3664 T
WWW.STUDIO818ENGINEERING.COM

JB: 18-065
DESIGN BY: CBB
DRAWN BY: CBB

YON TANNER ARCHITECTURE
2175 S. JASMINE ST.
SUITE 217
DENVER CO 80222
PH: (303) 691-8000
FX: (303) 756-2332

RENOVATION FOR:
RED ROCKS COMMUNITY COLLEGE
COMMUNITY ROOM RELOCATION
13300 W. 6TH AVENUE
LAKEWOOD, CO 80228

DATE: NOV 9, 2018
PROJECT NO: 18107
ISSUE:
CONSTRUCTION DOCUMENTS
1 12-4-18 ADD.#1
2 12-10-18 ADD.#2

DRAWN: CBB
CHECKED: CBB
FILE NAME:

DWG NAME:
GENERAL NOTES ENLARGED PLAN & DETAILS

SHEET NO:
S0.1

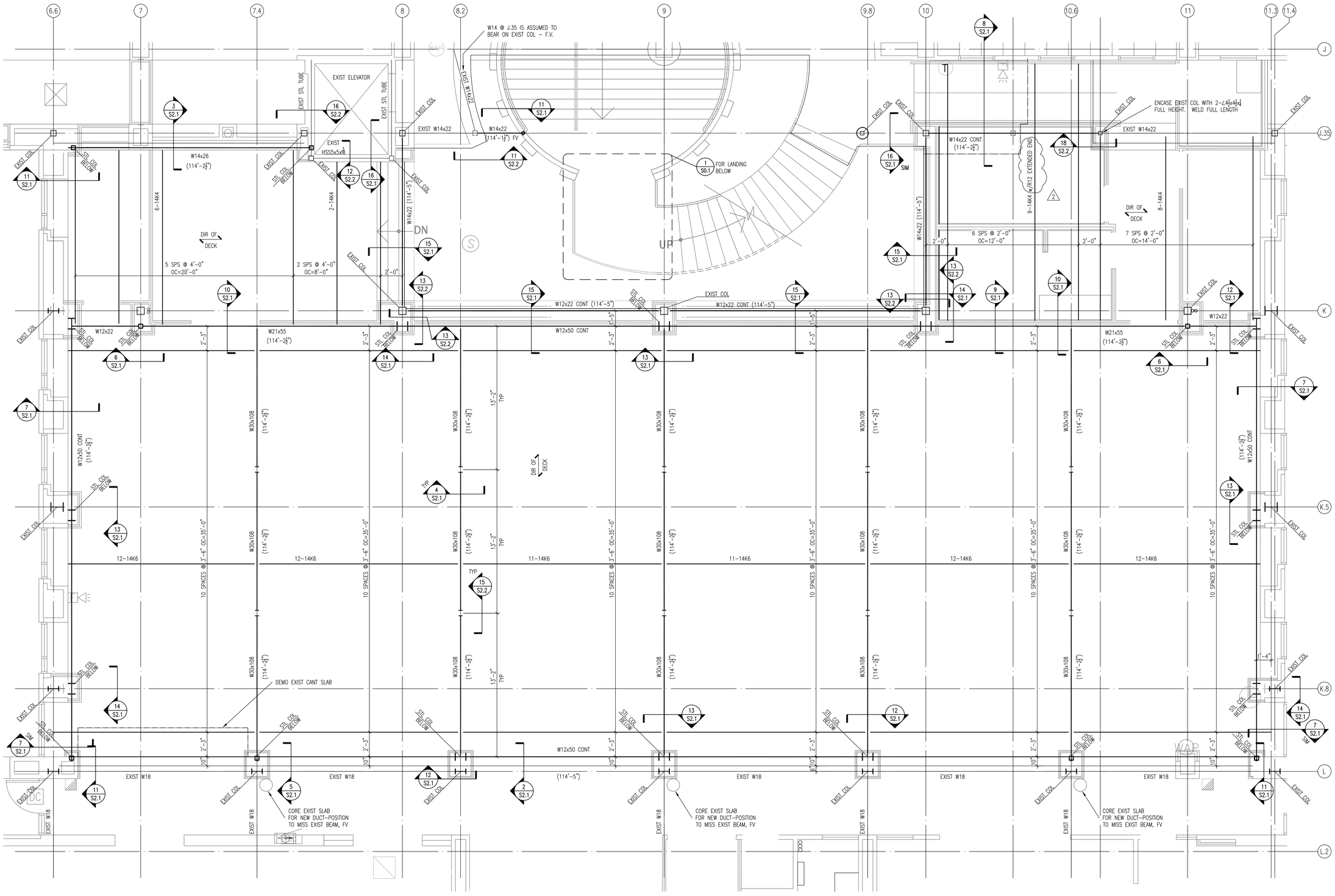

FLOOR FRAMING PLAN

1 / S1.2

1/4"=1'-0"

NOTES:

1. FLOOR CONSTRUCTION SHALL BE 3" CONCRETE TOPPING REINFORCED WITH 6x6-W2.9xW2.9 WWF ON 0.6", 22 GA. TYPE C METAL DECK. DECK SHALL BE CONTINUOUS OVER 3 SPANS, MINIMUM.
2. (XX'-XX")-INDICATES ELEVATION OF JOIST BEARING & TOP OF STEEL BEAM. TOP OF CONCRETE SHALL BE 114'-8", MATCH EXIST (F.V).
3. FIELD VERIFY EXISTING CONDITIONS/DIMENSIONS SHOWN ON THIS DRAWING.

Studio 818 ENGINEERING
7611 GRANDVIEW AVE.
DENVER, CO 80002
303 255 3664 T
WWW.STUDIO818ENGINEERING.COM

JB: 18-065
DESIGN BY: CBB
DRAWN BY: CBB

YON TANNER ARCHITECTURE
2175 S. JASMINE ST.
SUITE 217
DENVER CO 80222
PH: (303) 691-8000
FX: (303) 756-2332

RENOVATION FOR:
RED ROCKS COMMUNITY COLLEGE
COMMUNITY ROOM RELOCATION
13300 W. 6TH AVENUE
LAKEWOOD, CO 80228

DATE: NOV 9, 2018
PROJECT NO: 18107
ISSUE:
CONSTRUCTION DOCUMENTS
1 12-4-18 ADD.#1
2 12-10-18 ADD.#2

DRAWN: CBB
CHECKED: CBB
FILE NAME:

DWG NAME:
FLOOR FRAMING PLAN

SHEET NO:
S1.2

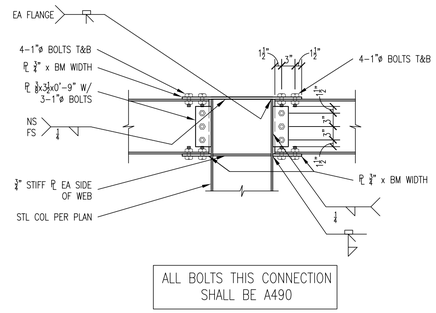

13 S2.1 SECTION 3/4"=1'-0"

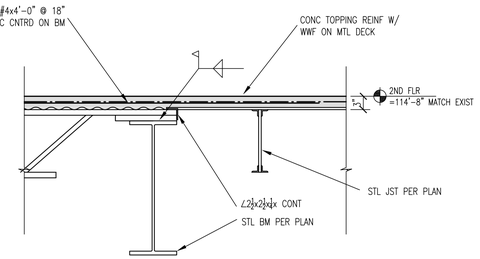

9 S2.1 SECTION 3/4"=1'-0"

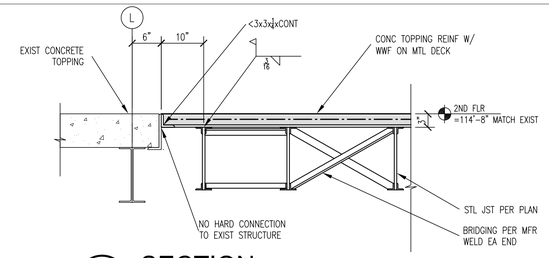

5 S2.1 SECTION 3/4"=1'-0"

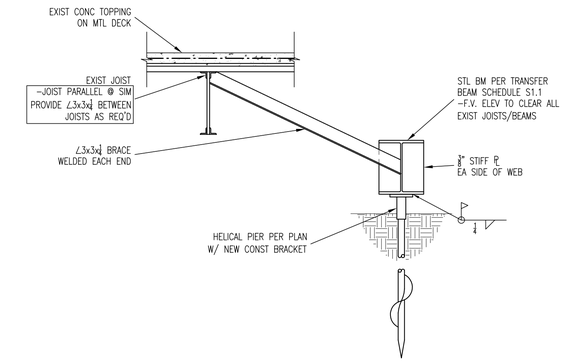

1 S2.1 SECTION 3/4"=1'-0"

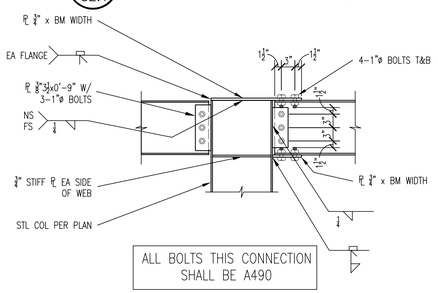

14 S2.1 SECTION 3/4"=1'-0"

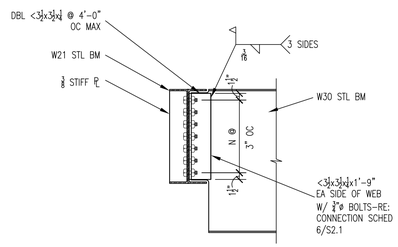

10 S2.1 SECTION 3/4"=1'-0"

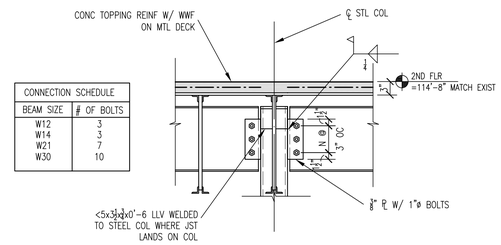

CONNECTION SCHEDULE	
BEAM SIZE	# OF BOLTS
W12	3
W14	3
W21	7
W30	10

6 S2.1 SECTION 3/4"=1'-0"

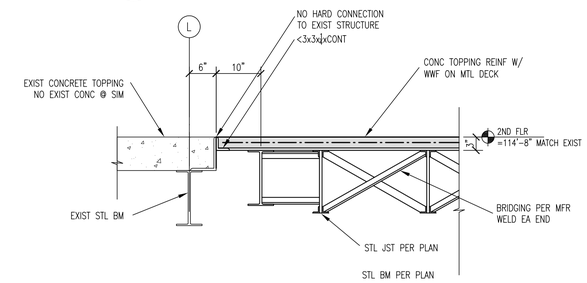

2 S2.1 SECTION 3/4"=1'-0"

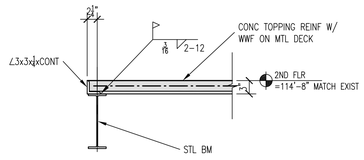

15 S2.1 SECTION 3/4"=1'-0"

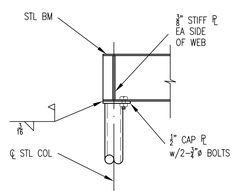

11 S2.1 SECTION 3/4"=1'-0"

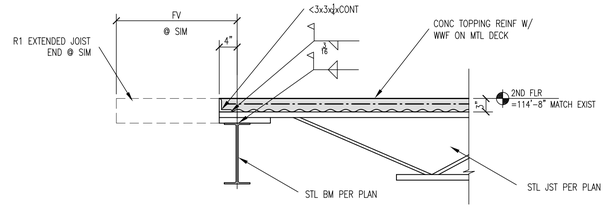

7 S2.1 SECTION 3/4"=1'-0"

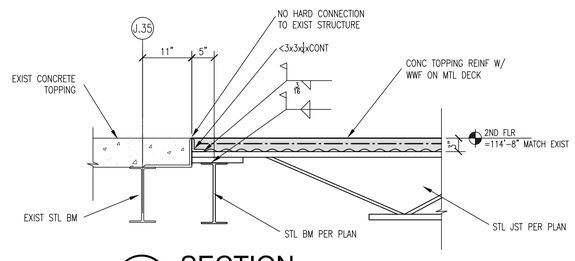

3 S2.1 SECTION 3/4"=1'-0"

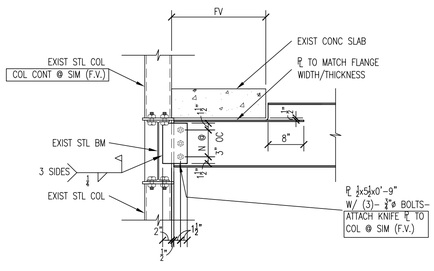

16 S2.1 SECTION 3/4"=1'-0"

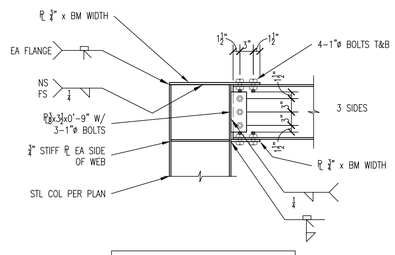

12 S2.1 SECTION 3/4"=1'-0"

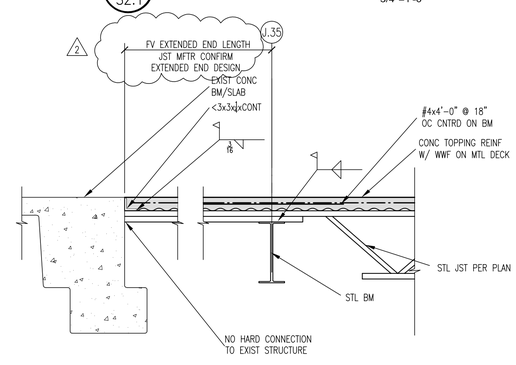

8 S2.1 SECTION 3/4"=1'-0"

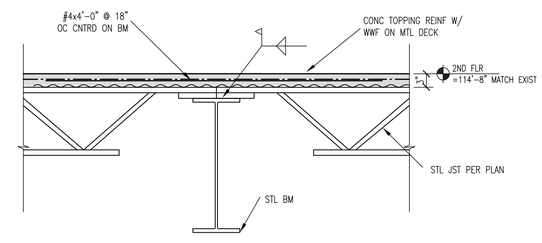

4 S2.1 SECTION 3/4"=1'-0"

Studio 818 ENGINEERING
7611 GRANDVIEW AVE.
DENVER, CO 80002
JB: 18-065
DESIGN BY: CBB
DRAWN BY: CBB
303 255 3664 T
WWW.STUDIO818ENGINEERING.COM

YON TANNER ARCHITECTURE
2175 S. JASMINE ST.
SUITE 217
DENVER CO 80222
PH: (303) 691-8000
FX: (303) 756-2332

RENOVATION FOR:
RED ROCKS COMMUNITY COLLEGE
COMMUNITY ROOM RELOCATION
13300 W. 6TH AVENUE
LAKEWOOD, CO 80228

DATE: NOV 9, 2018
PROJECT NO: 18107
ISSUE:
CONSTRUCTION DOCUMENTS
1 12-4-18 ADD.#1
2 12-10-18 ADD.#2

DRAWN: CBB
CHECKED: CBB
FILE NAME:

DWG NAME:
DETAILS

SHEET NO:
S2.1